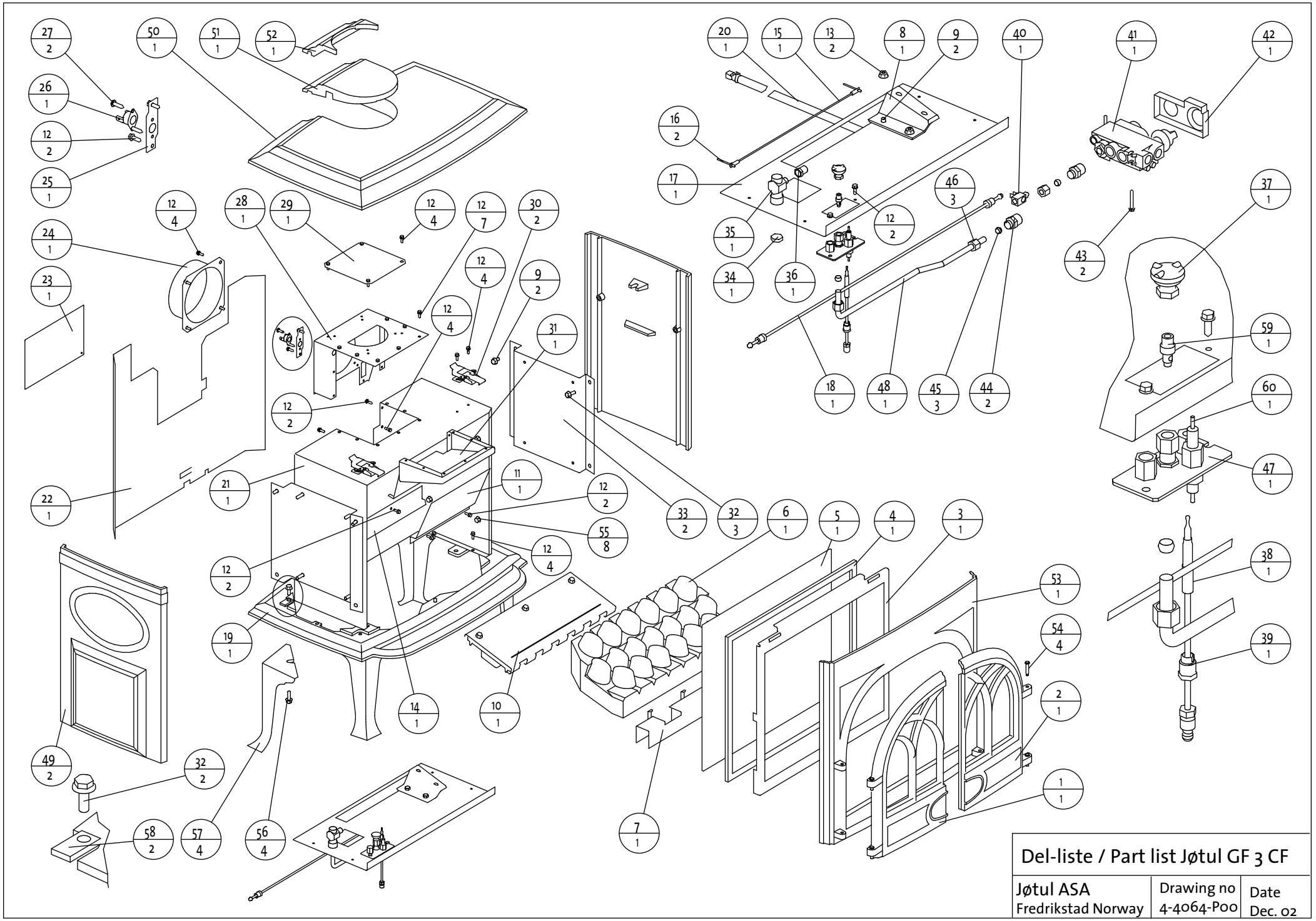

Del-liste / Part list Jøtul GF 3 CF		
Jøtul ASA Fredrikstad Norway	Drawing no 4-4064-P00	Date Dec. 02