## FRANCO 704 & 706 CONVERSION SPARES

| ITEM | APPLIANCE | PART No |
|---|---|---|
| | **FRANCO 704 & 706** | **92-09-045** |
| | | |
| 1 | BURNER | 77-10-001-VM1 |
| 2 | CLOSURE PLATE | 87-18-045CP |
| 3 | BAFFLE BOX | 87-01-040-1 |
| 4 | BOARD KIT | 87-19-040-1 |
| 5 | BAFFLE BOX BOARD | 87-04-040 |
| 6 | CLOSURE PLATE BOARD | 87-19-040A |
| 7 | FRONT BOARD | 87-19-040C |
| 8 | BI POLE STAT | 77-01-007 |
| 9 | STAT MOUNTING BRACKET | 87-02-035-C |
| 10 | TEDDINGTON KBB FIRE VALVE | 77-07-056 |
| 11 | LARGE CABLE GLAND | RS393-056 |
| 12 | SMALL CABLE GLAND | 77-01-023 |
| 13 | FLEXIHOSE 750MM LONG | 77-01-017-F |
| 14 | NOZZLE 0.5 USG X 60 DEGS | 77-01-016-G |

**THE PERSON DEALING WITH THE INQUIRY SHOULD VERIFY**

**1 THE TYPE OF BURNER (COLOUR, FLEXAFLAME, SERIAL NO,GAS OR OIL)**

**2 THE TYPE OF STAT ASS (BI POLE OR PIPE STATS)**

**NOTE**

**ANY ITEM REQUIRED CAN BE USED ON ALL**
**PREVIOUS VERSIONS OF CONVERSION KITS**
**STAFF TO MAKE THE FOLLOWING MODIFICATIONS**
**TO SUITE REQUIRED CONVERSION**

**FOLLOW THESE INSTRUCTIONS WHEN A BLUE, BLACK,OR GREEN BOX BURNER IS IN USE**

**1 CLOSURE PLATE REMOVE NUTS & BOLTS**

**2 CLOSURE BOARD FOR GAS CONVERSION REQUIRES**
**IOOmm DIA HOLE**

**3 ALL BOARDS MARK TRIM ON SITE**
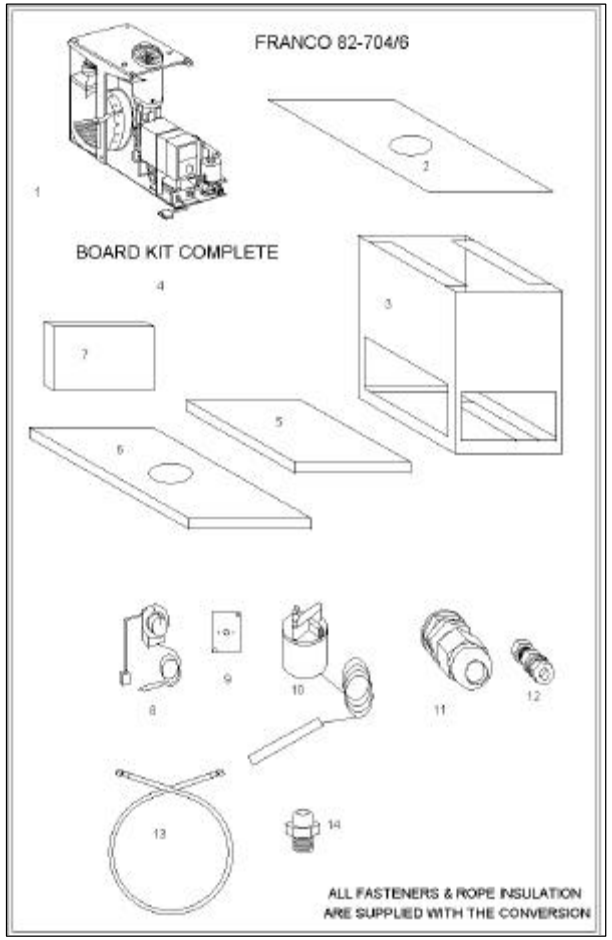
**WHEN VIEWING THE SHEET IS FINISHED, SELECT LIST THEN CLOSE THE SHEET**