HARWORTH HEATING LTD TEL 01302 742520

FRANCO 705 CONVERSION SPARES

ITEM	APPLIANCE	PART No
	FRANCO 705	92-09-055
1	BURNER	77-10-001-VM1
2	CLOSURE PLATE	87-18-055CP
3	BAFFLE BOX	87-01-055-1
4	BOARD KIT	87-19-055-1
5	BAFFLE BOX TOP	87-04-055
6	CLOSURE PLATE BOARD	87-19-055A
7	FRONT BOARD	87-19-055B
8	L/LEAD BOXED BI POLE STAT	77-01-007-D
9	PHIAL POCKET BUSH	77-01-200
10	TEDDINGTON KBB FIRE VALVE	77-07-004-C
11	LARGE CABLE GLAND	RS393-056
12	SMALL CABLE GLAND	77-01-023
13	FLEXIHOSE 750MM LONG	77-01-017-F
14	NOZZLE 0.5 USG X 60 DEGS	77-01-016-G

THE PERSON DEALING WITH THE INQUIRY SHOULD VERIFY

1 THE TYPE OF BURNER (COLOUR, FLEXAFLAME, SERIAL NO,GAS OR OIL)

2 THE TYPE OF STAT ASS (BI POLE OR PIPE STATS)

NOTE

ANY ITEM REQUIRED CAN BE USED ON ALL PREVIOUS VERSIONS OF CONVERSION KITS STAFF TO MAKE THE FOLLOWING MODIFICATIONS TO SUITE REQUIRED CONVERSION

OLLOW THESE INSTRUCTIONS WHEN A BLUE, BLACK,OR GREEN BOX BURNER IS IN USE

1 CLOSURE PLATE REMOVE NUTS & BOLTS

2 CLOSURE BOARD FOR GAS CONVERSION REQUIRES IOOmm DIA HOLE

3 ALL BOARDS MARK TRIM ON SITE
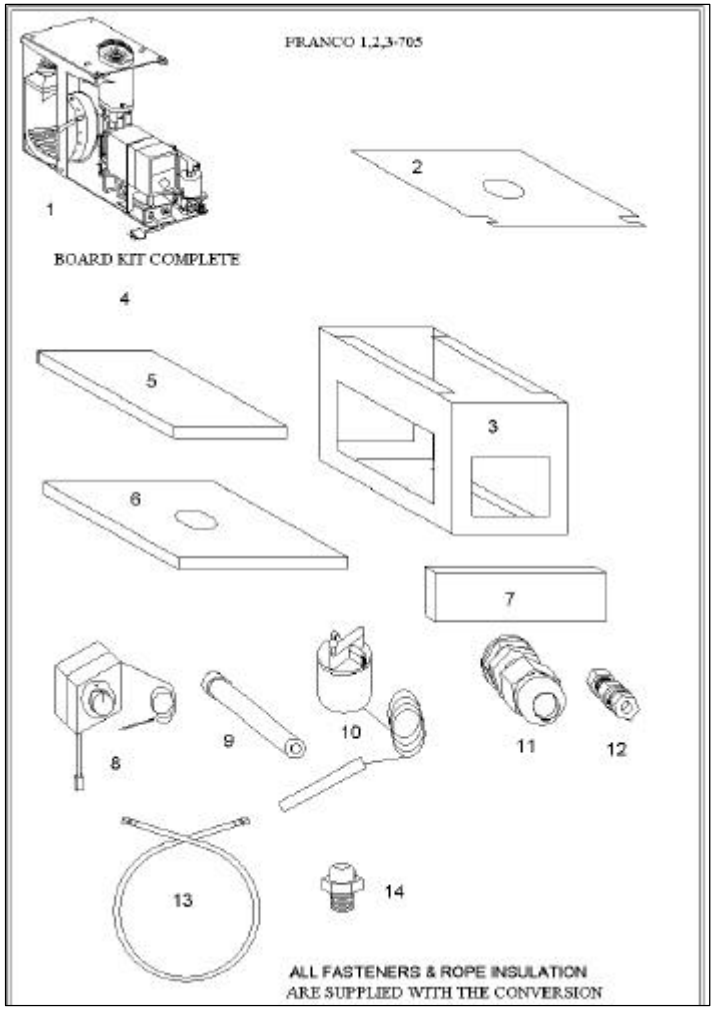
WHEN VIEWING THE SHEET IS FINISHED, SELECT LIST THEN CLOSE THE SHEET